HEKLA

CUBE SAUNA 210
ASSEMBLY INSTRUCTION

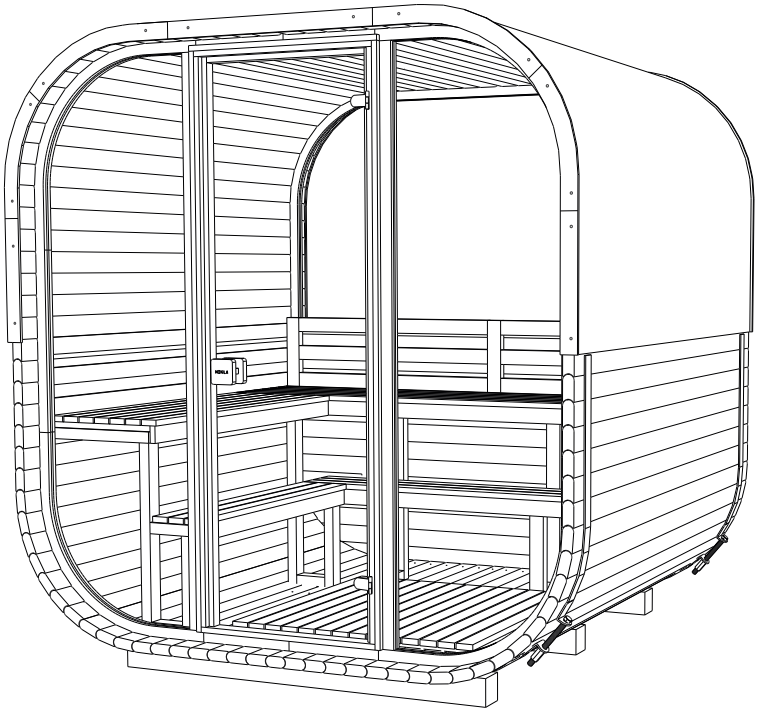

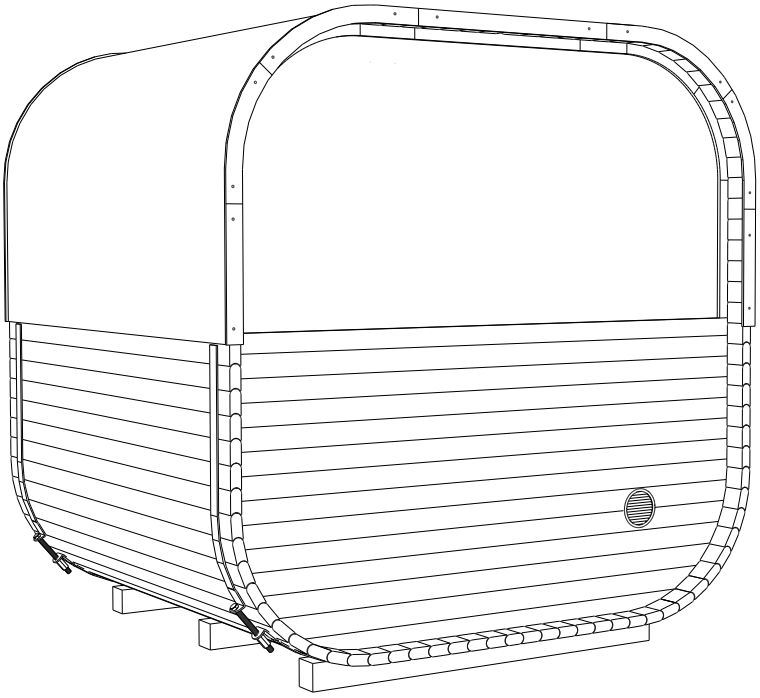

MODEL: **DIY SAUNA QP-229-210**

PART LIST

A x3	B x1	C x98	H x2	H1 x4
cradle	center stave	body stave	final H tipe stave at the top	different thickness filling peaces
F x2	F1 x4	F2 x1	V x1	F1 x1
left and right panel section with window	door molding	door panel	bottom rear panel	panel with panoramic window
J x1	J3 x1	J4 x1	J5 x1	J1 x2
sauna bench (long)	sauna bench (short)	sauna bench step (long)	sauna bench step (short)	supporting leg
J6 x2	J7 x3	J2 x1	J8 x2	J9 x1
supporting leg	backrest stave	backrest in front of panorama window	support board for sauna bench	support board for sauna bench step
L x1	W x14	O x1	I x2	D x1
flooring duckboard	decorative roof finishing board	aspen ceiling board	metal band	assembly tape

PART LIST

M x2	N x65	N1 x50	S x230	G x35
screw 5.0x120	screw 5.0x100	screw 5.0x70	screw 4.0x60	screw 4.2x55
T x40	T2 x10	T3 x6		
screw 4.0x40	screw 4.0x30	screw 3.0x25		

U x2 + x2 + x4

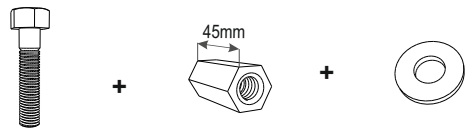

bolt ø16x140	hex nut M16 (SW24)	flat washer

PO-

Signature

BARREL DIMENSIONS

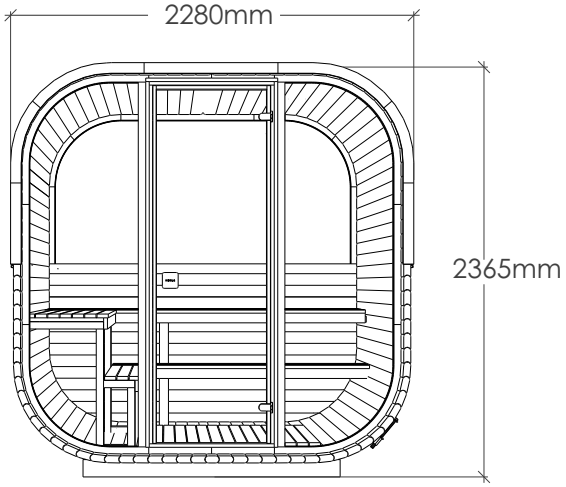

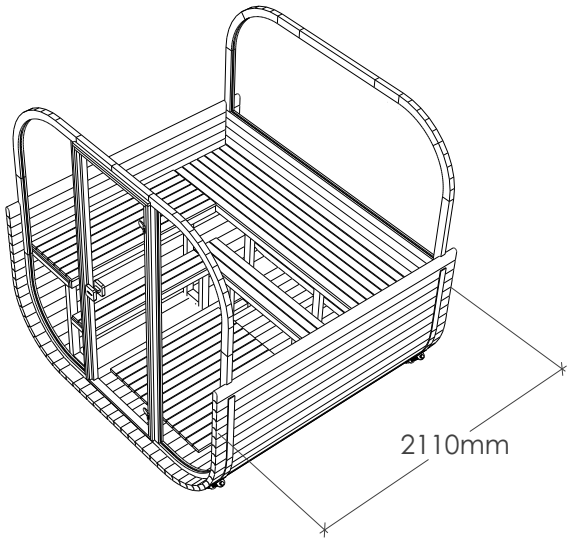

RECOMMENDATION	TOOLS REQUIRED
2 person recommended	2m, 3m, 2.4mm x2, rubber

STEP 1:

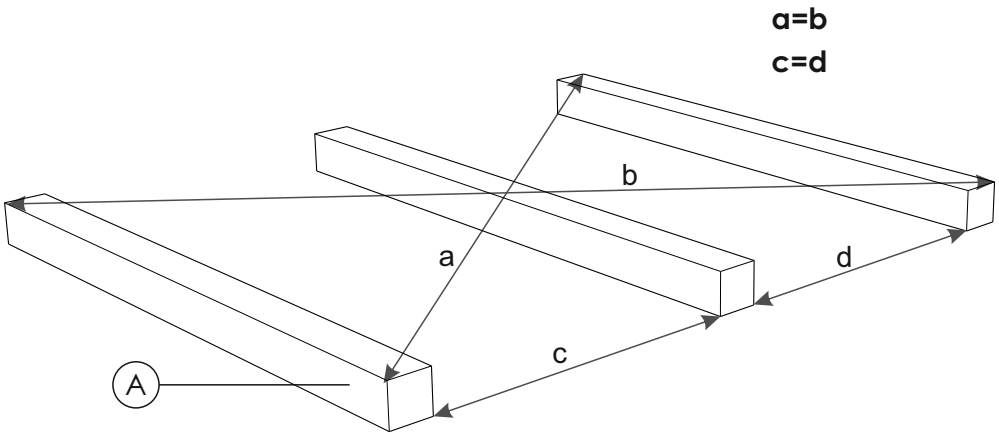

STEP 2:

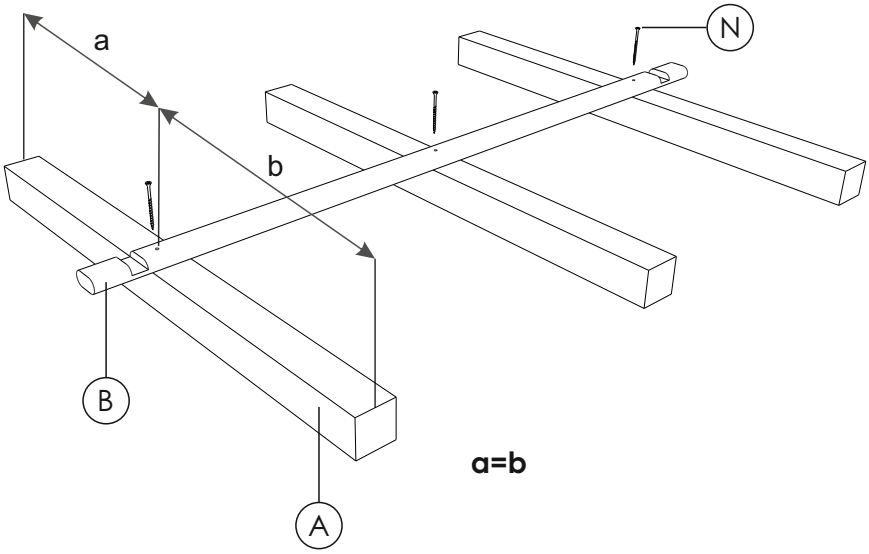

STEP 3:

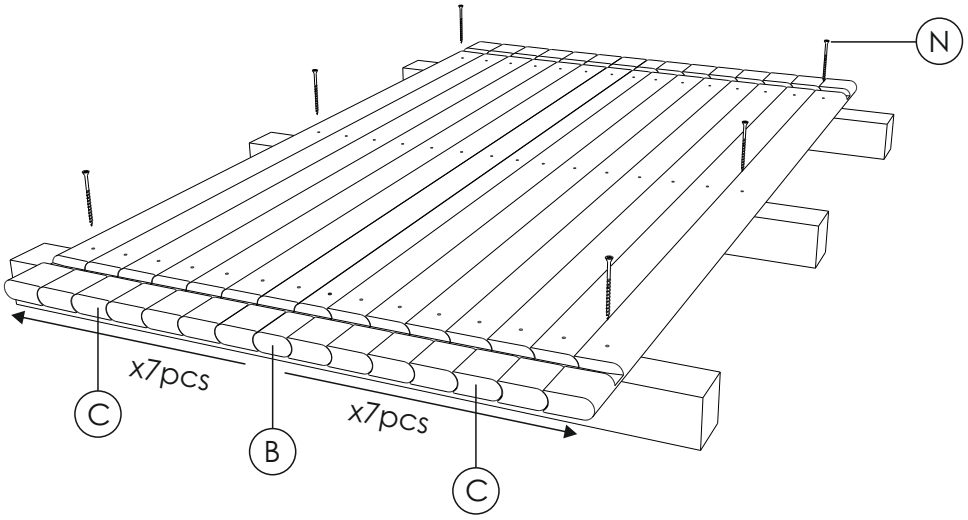

STEP 4:

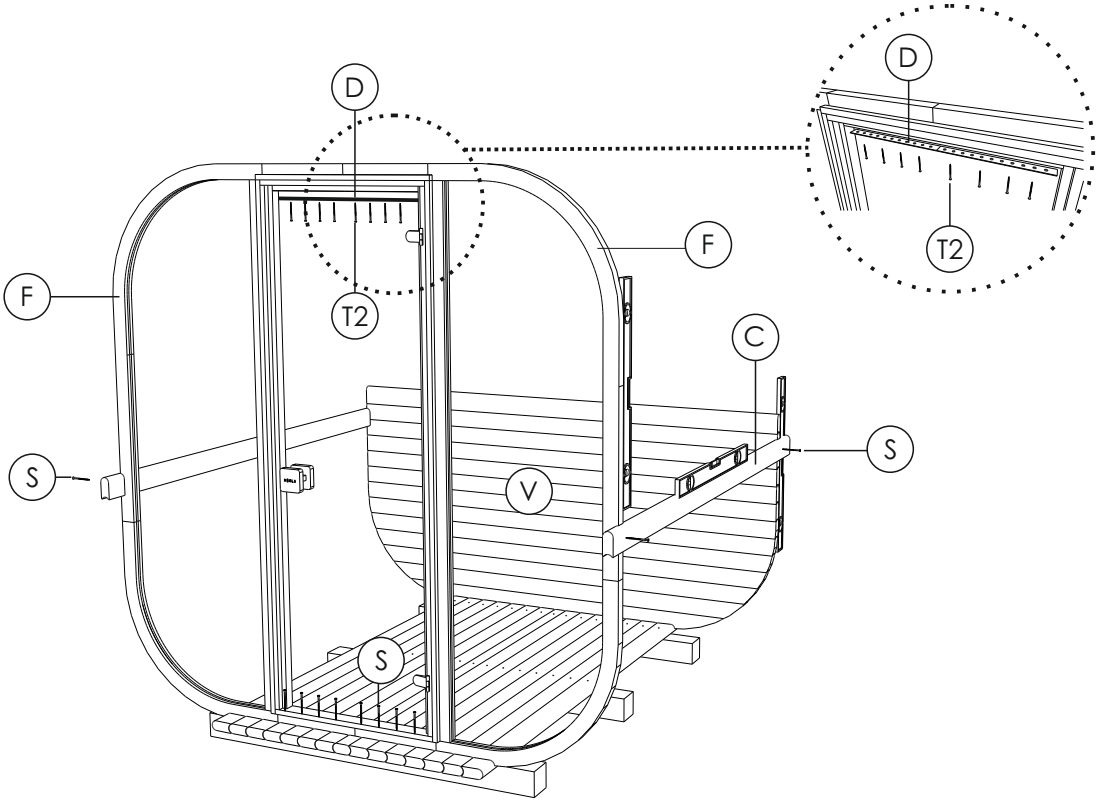

STEP 5:

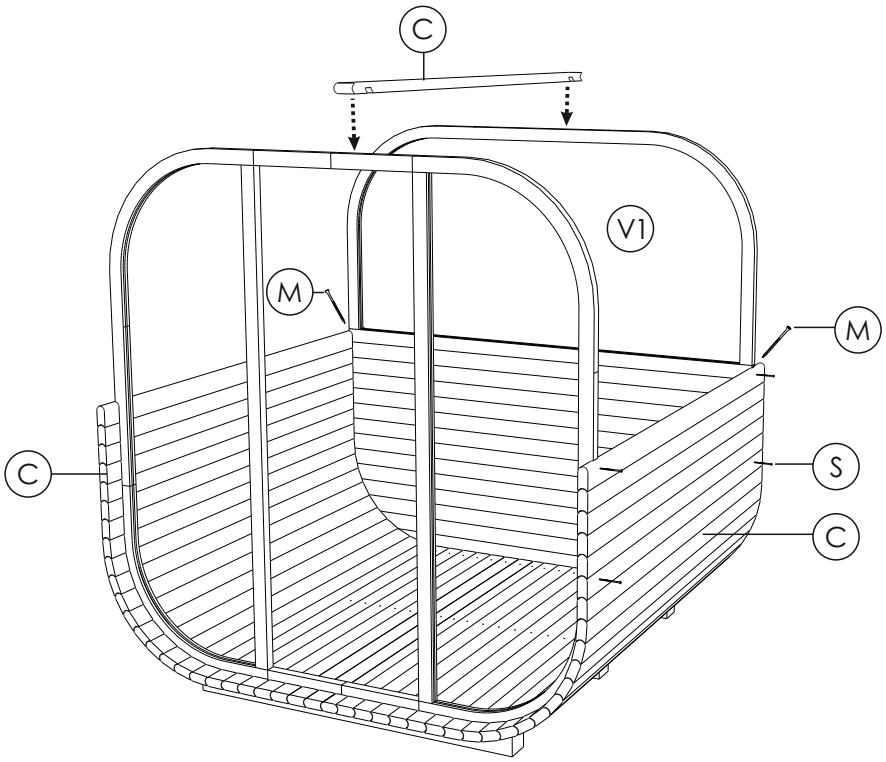

STEP 6:

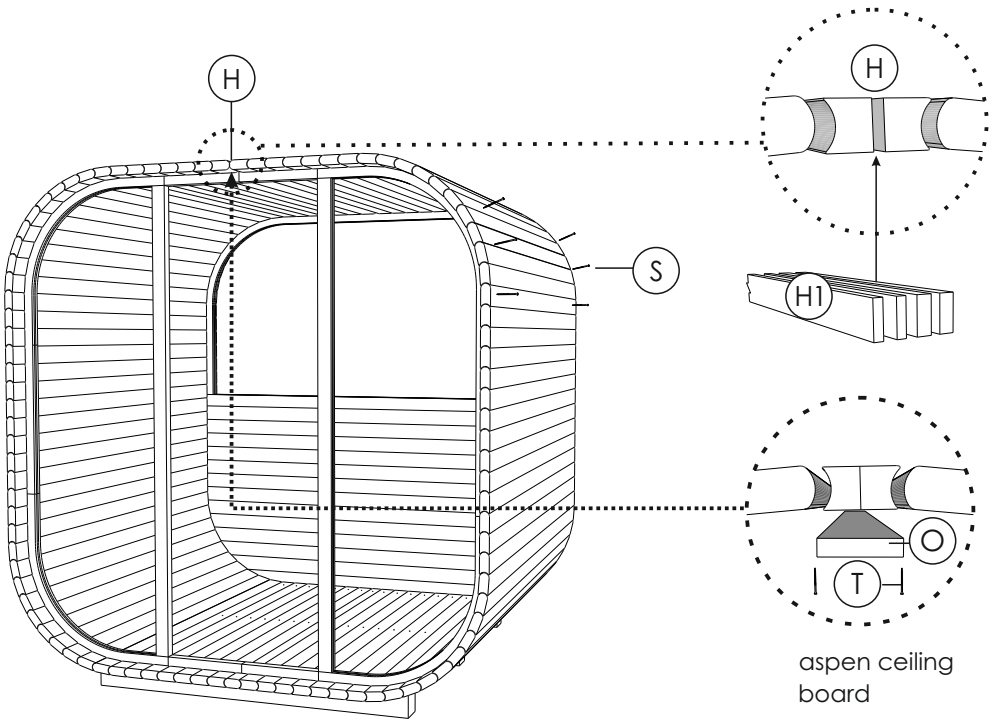

STEP 7:

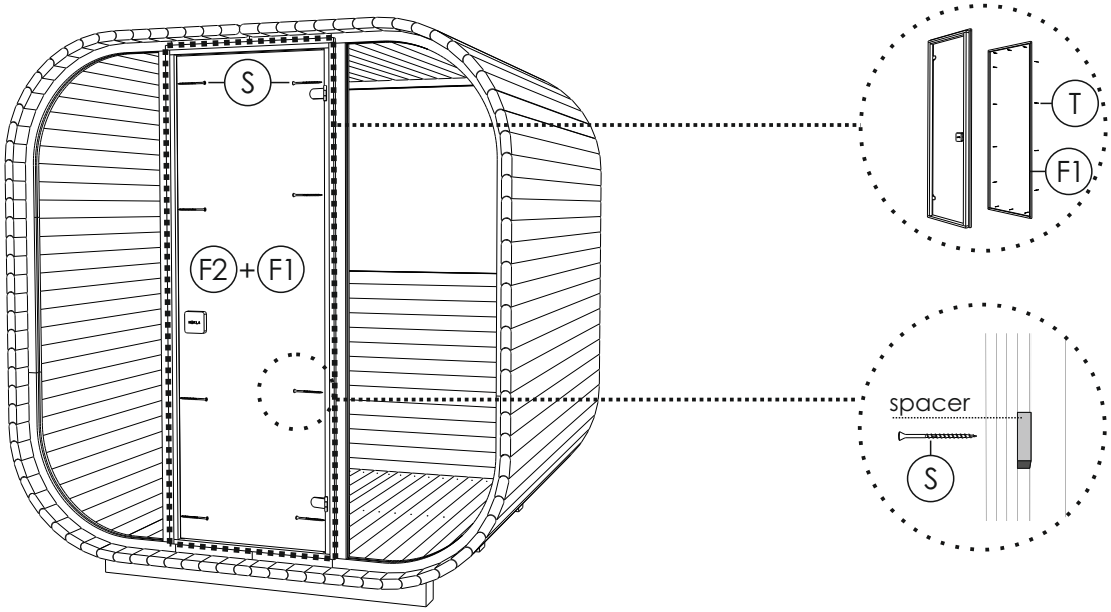

STEP 8:

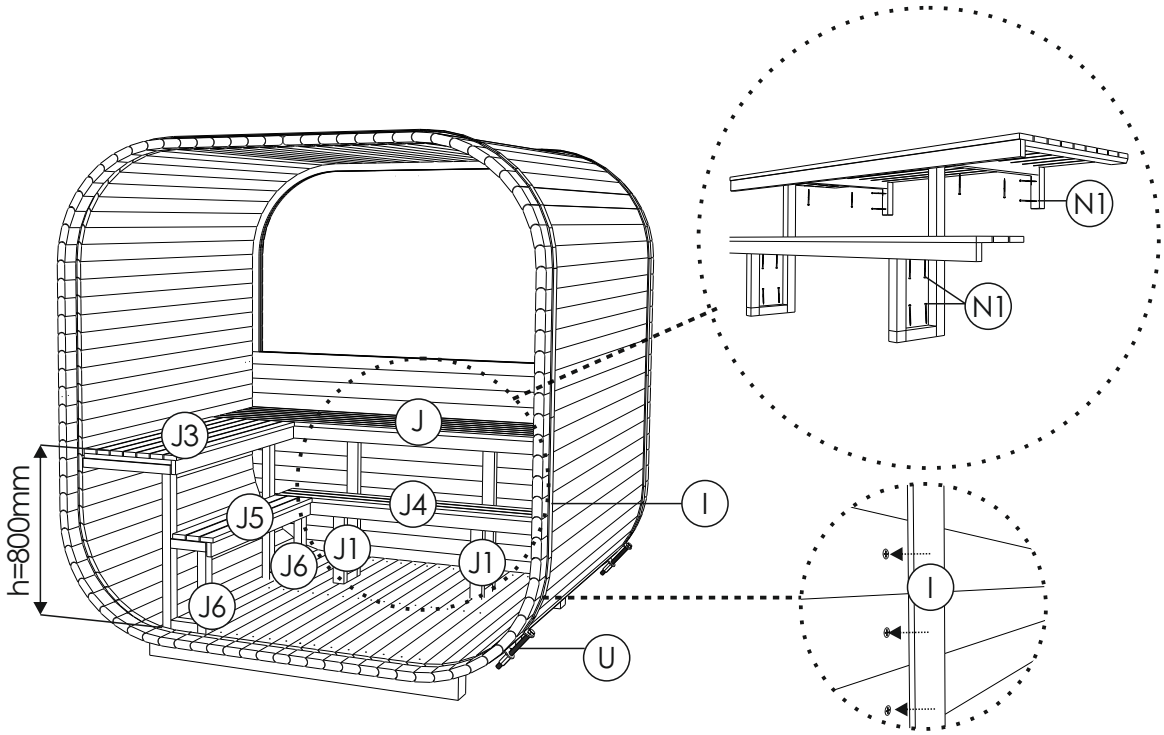

STEP 9:

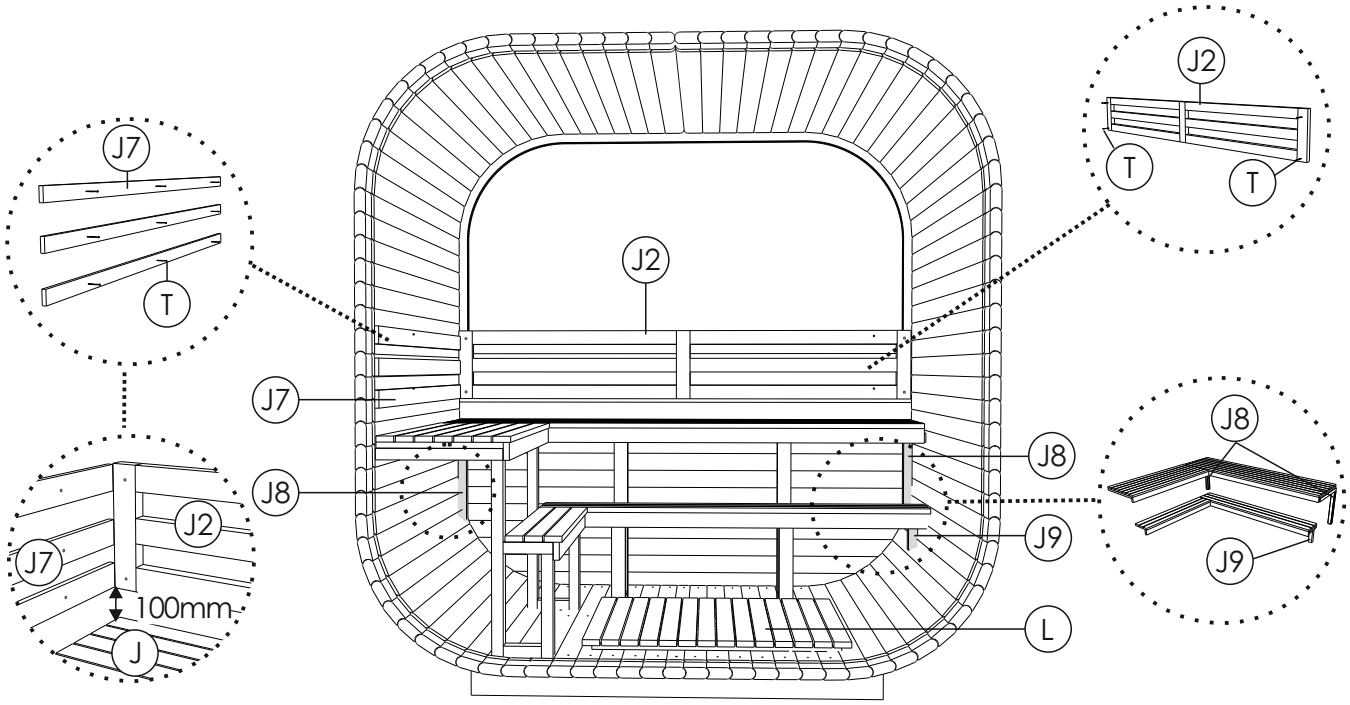
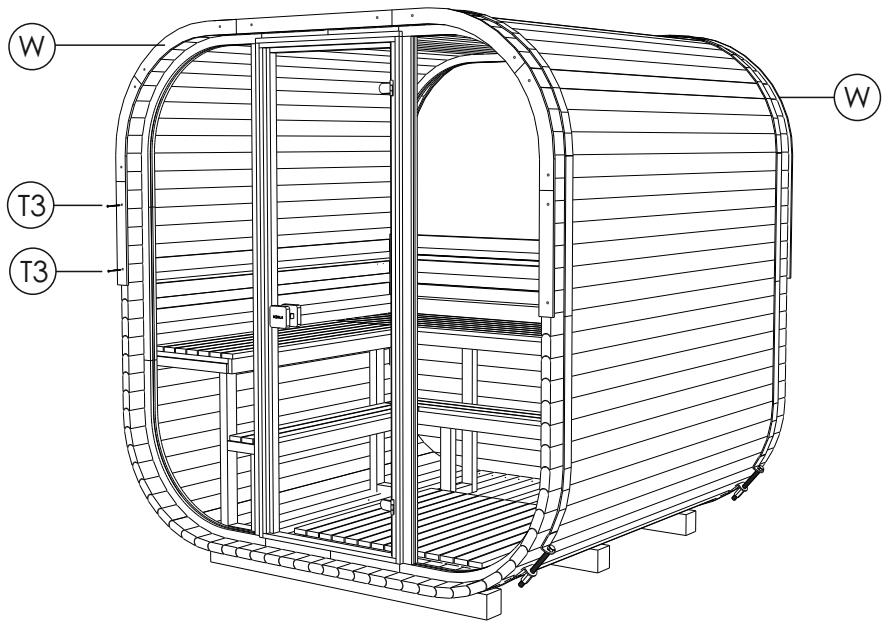
STEP 10: